LAYING LENGTHS

WYE GxGxG

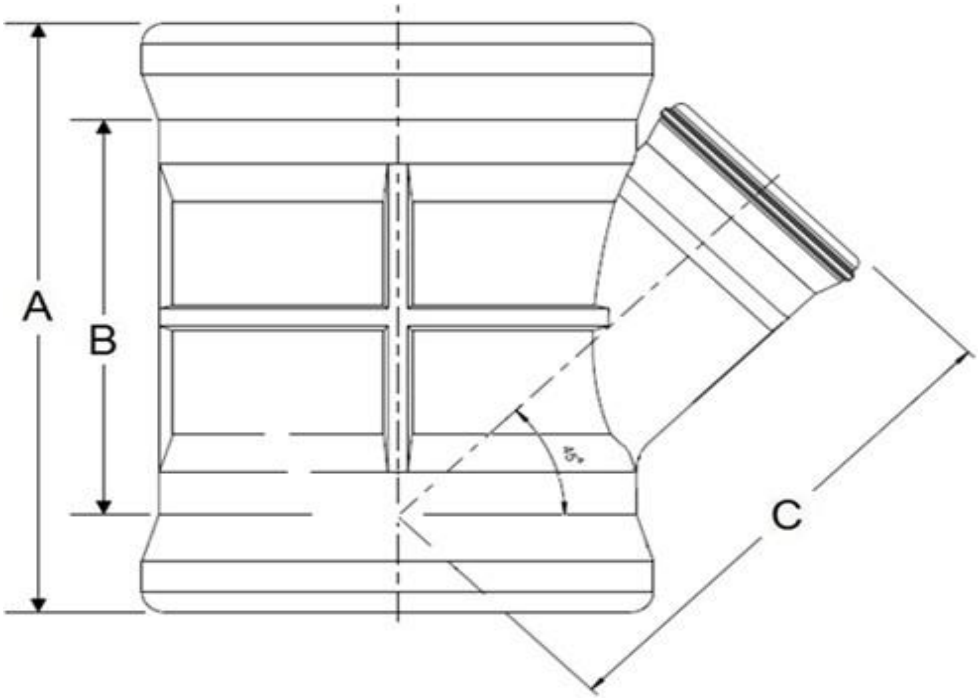

INJECTION MOLDED FITTING

Part #	Size	A	B	C
35-1500	4"	10.47	6.14	7.28
35-1501	6" x 4"	11.97	6.30	9.06
35-1502	6"	14.80	9.25	10.33
35-1503	8" x 4"	13.11	6.50	10.35
35-1504	8" x 6"	15.75	9.57	12.83
35-451	8"	19.76	13.39	14.69
35-452	10" x 4"	14.57	6.54	11.42
35-453	10" x 6"	17.32	9.45	13.39
35-455	10"	29.84	21.97	20.08
35-456	12" x 4"	19.00	9.69	13.31
35-457	12" x 6"	19.00	9.69	14.57
35-460	12"	36.22	25.31	24.41

LAYING LENGTHS

WYE STREET GxSxG

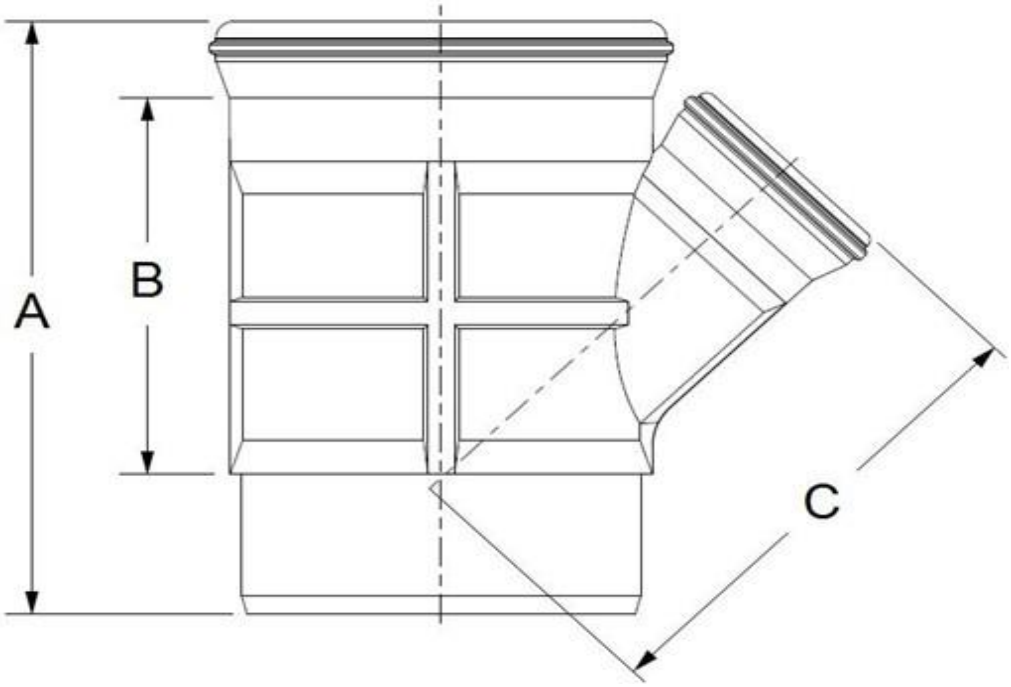

INJECTION MOLDED FITTING

Part #	Size	A	B	C
35-1505	4"	10.47	6.14	7.28
35-1506	6" x 4"	11.97	6.30	9.06
35-1507	6"	14.80	9.25	10.33
35-1508	8" x 4"	13.11	6.50	10.35
35-1509	8" x 6"	15.75	9.57	12.83
35-493	8"	19.76	13.39	14.69

LAYING LENGTHS

TEE GxGxG

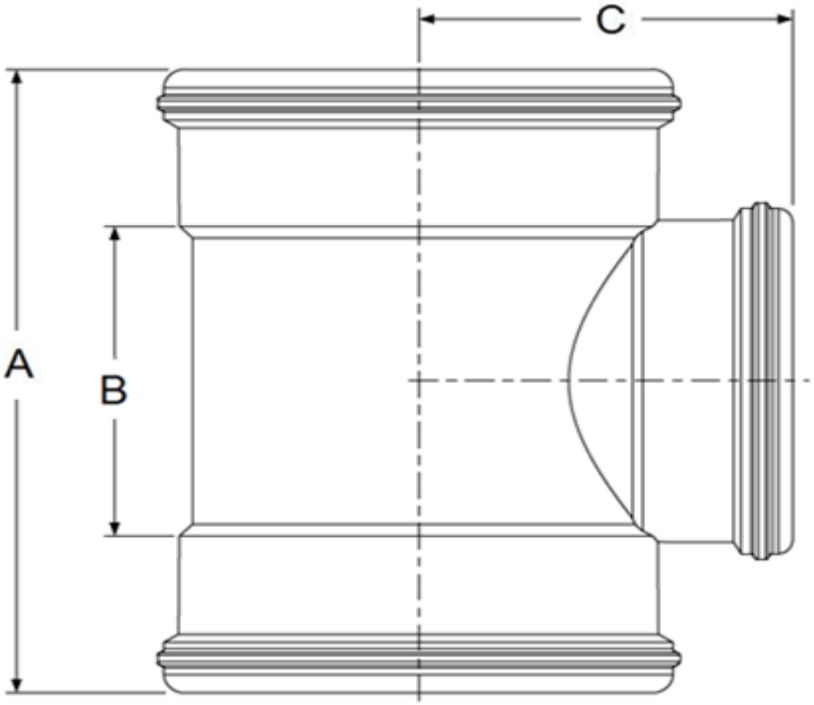

INJECTION MOLDED FITTING

Part #	Size	A	B	C
35-1528	4"	8.40	4.22	4.07
35-1529	6" x 4"	10.19	4.47	5.31
35-1530	6"	11.98	6.30	5.73
35-1531	8" x 4"	11.18	4.60	6.01
35-1711	8" x 5"	13.22	6.64	6.50
35-1532	8" x 6"	13.27	6.63	6.69
35-367	8"	15.64	8.96	7.46
35-368	10" x 4"	16.66	6.60	8.75
35-369	10" x 6"	14.77	6.77	7.82
35-370	10" x 5"	14.82	6.79	7.89
35-371	10"	23.50	12.25	10.94
35-372	12" x 4"	19.06	7.00	9.75
35-373	12" x 6"	16.05	6.80	8.74
35-374	12"x 5"	16.05	6.90	9.15
35-376	12"	28.75	14.50	14.50

LAYING LENGTHS

DOUBLE WYE GxGxGxG

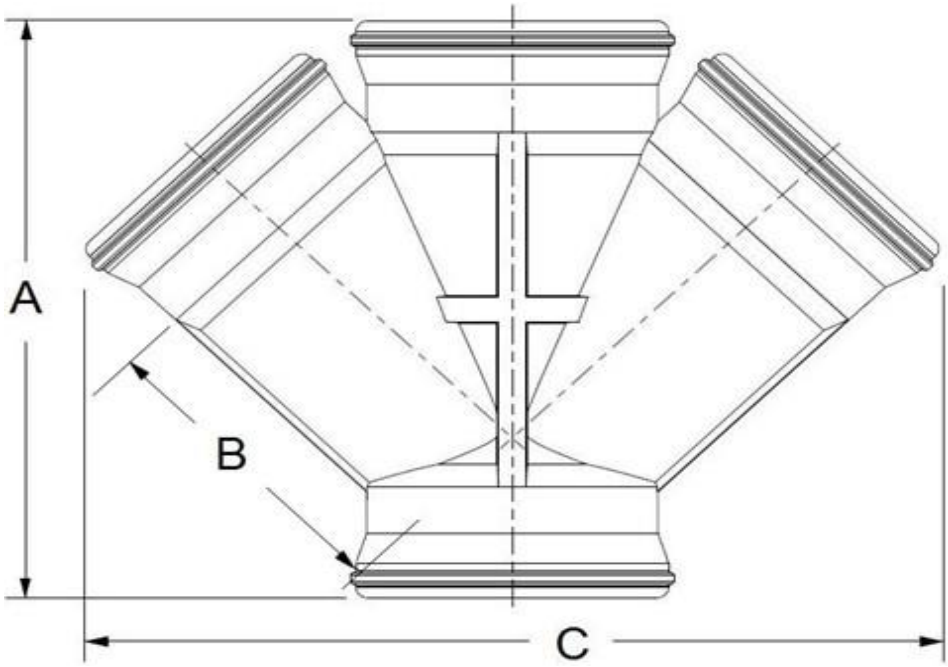

INJECTION MOLDED FITTING

Part #	Size	A	B	C
35-1510	6" x 4"	12.63	6.53	16.63
35-1511	6"	15.50	7.56	20.19
35-47	8" x 4"	19.13	8.03	20.50
35-48	8" x 6"	20.00	9.06	23.88

LAYING LENGTHS

1/4 BEND GxG

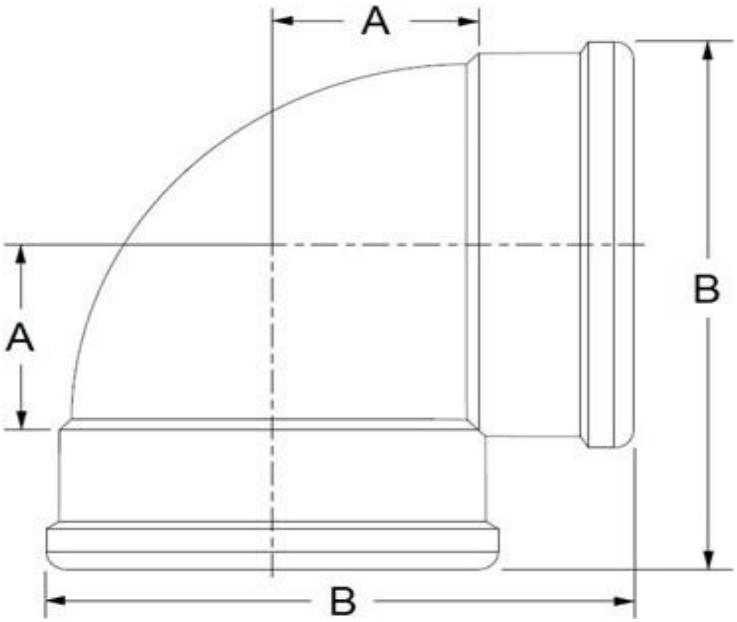

INJECTION MOLDED FITTING

Part #	Size	A	B
35-1596	4"	2.13	6.25
35-1597	6"	4.38	9.25
35-96	8"	4.77	11.75
35-105	10"	5.17	15.28
35-114	12"	6.50	17.50

LAYING LENGTHS

CAP

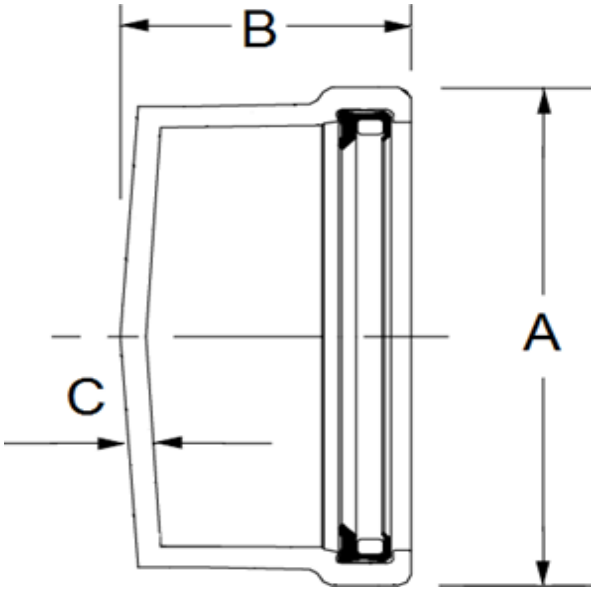

INJECTION MOLDED FITTING

Part #	Size	A	B	C
35-1623	4"	5.24	2.88	0.13
35-1624	6"	7.44	4.50	0.19
35-1625	8"	9.80	5.25	0.25
35-83	10"	11.81	6.00	0.32
35-84	12"	14.34	7.50	0.38

LAYING LENGTHS

1/4 BEND LONG SWEEP GxS

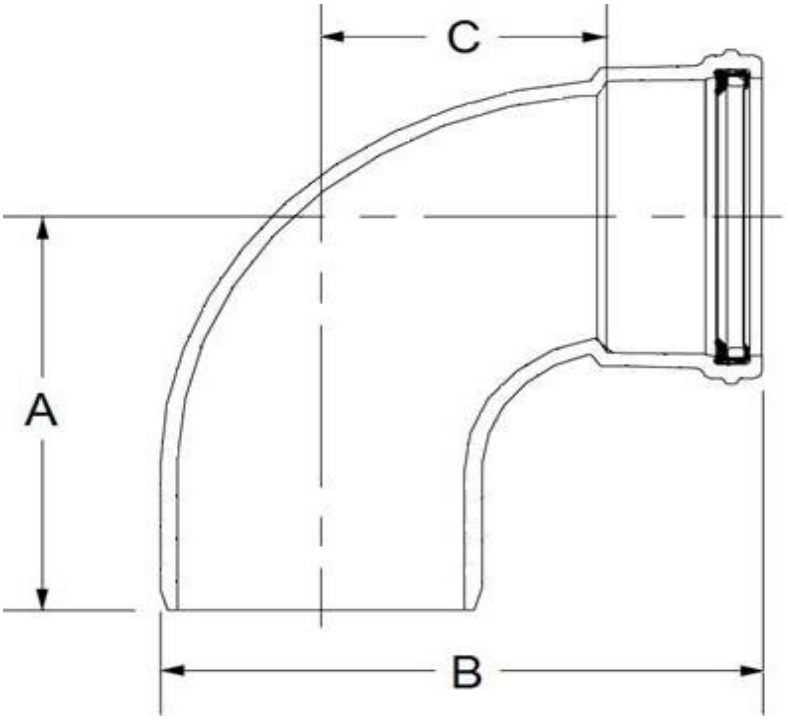

INJECTION MOLDED FITTING

Part #	Size	A	B	C
35-1591	4"	7.00	8.88	3.68
35-1592	6"	9.50	12.80	5.95
35-1593	8"	11.18	15.61	7.03

LAYING LENGTHS

1/4 BEND LONG SWEEP GxG

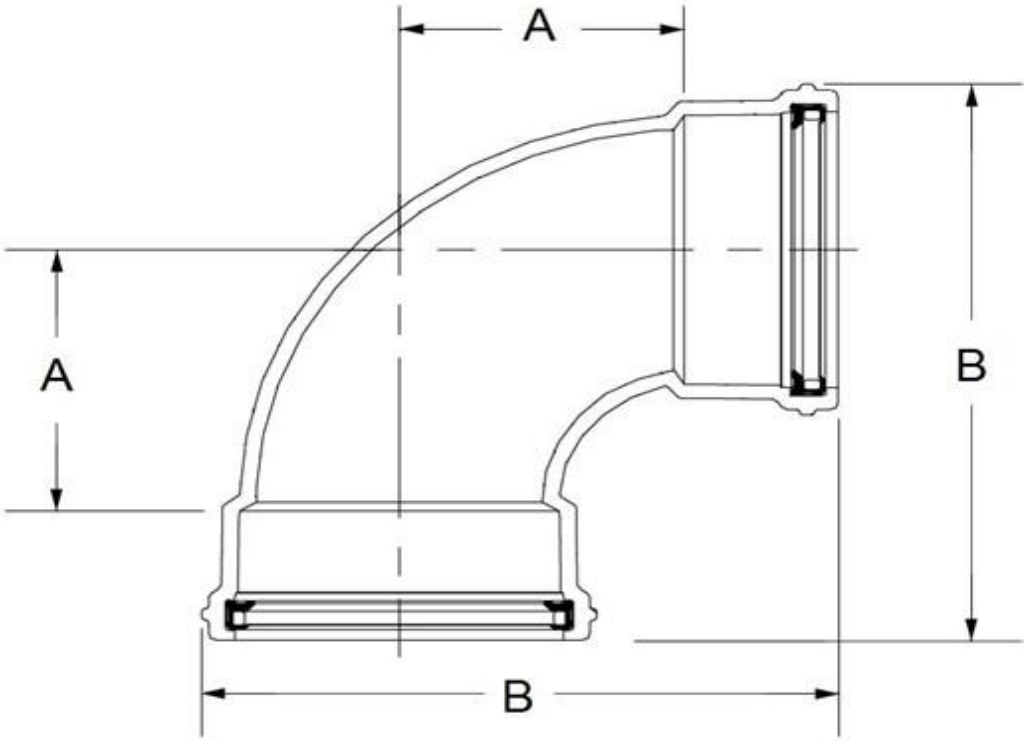

INJECTION MOLDED FITTING

Part #	Size	A	B
35-1586	4"	3.69	9.50
35-1587	6"	5.95	13.09
35-1588	8"	7.03	15.92

LAYING LENGTHS

1/4 BEND GxS

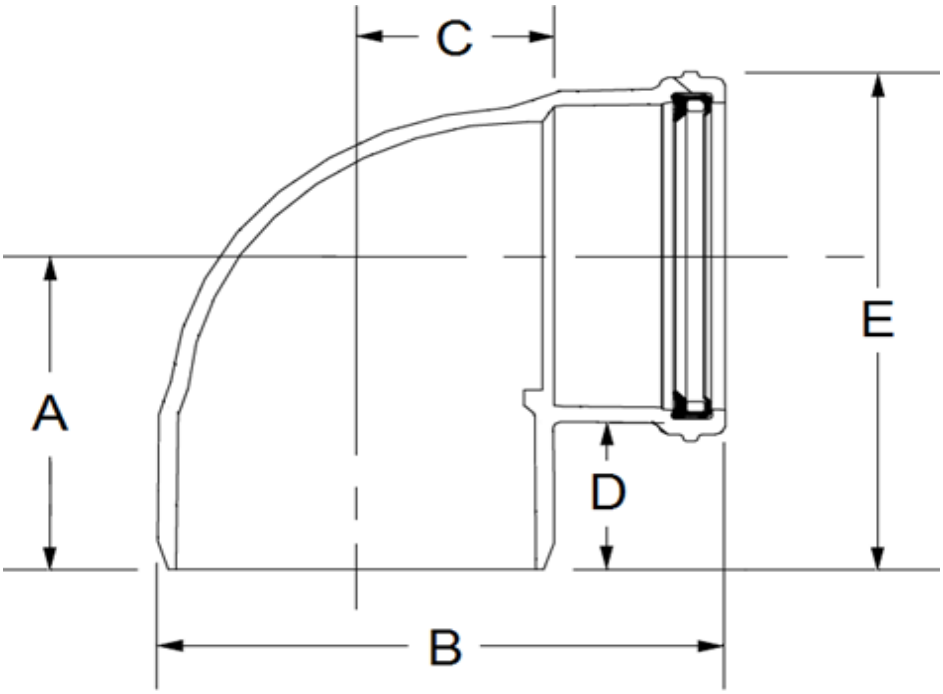

INJECTION MOLDED FITTING

Part #	Size	A	B	C	D	E
35-1598	4"	4.95	6.84	2.22	2.34	7.19
35-1599	6"	6.04	9.13	3.28	2.73	9.63
35-97	8"	8.09	11.13	4.38	3.49	12.84

LAYING LENGTHS

1/8 BEND GxG

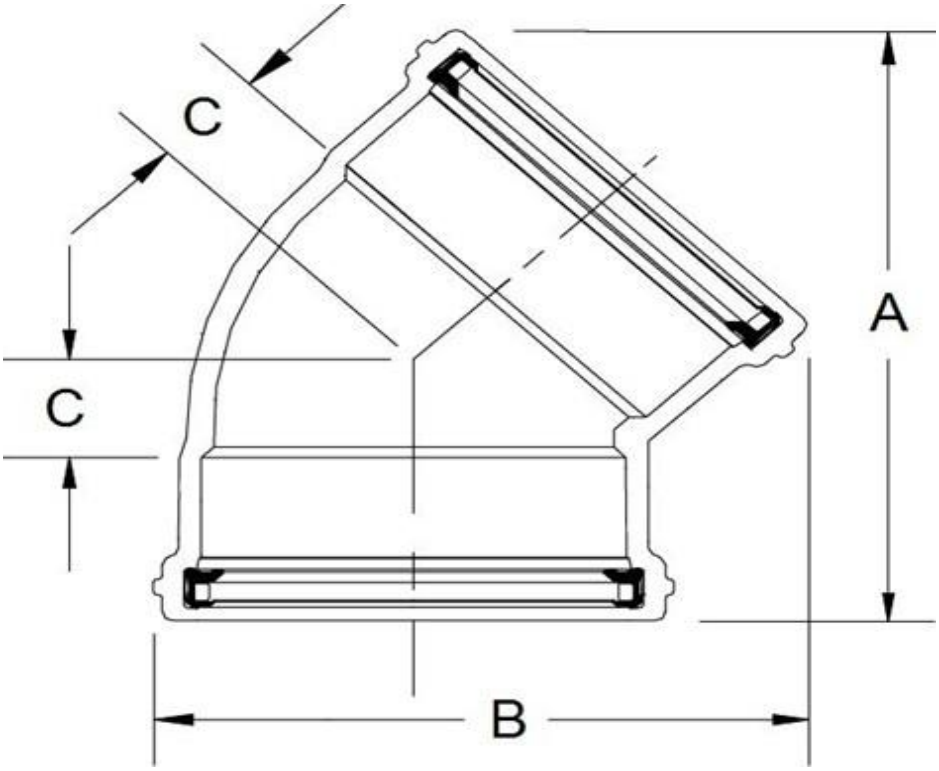

INJECTION MOLDED FITTING

Part #	Size	A	B	C
35-1600	4"	7.50	6.25	0.96
35-1709	5"	9.56	7.38	1.38
35-1601	6"	10.50	8.50	1.41
35-94	8"	10.63	11.63	1.10
35-103	10"	16.00	13.63	2.75
35-112	12"	17.79	17.75	2.81

LAYING LENGTHS

1/8 BEND GxS

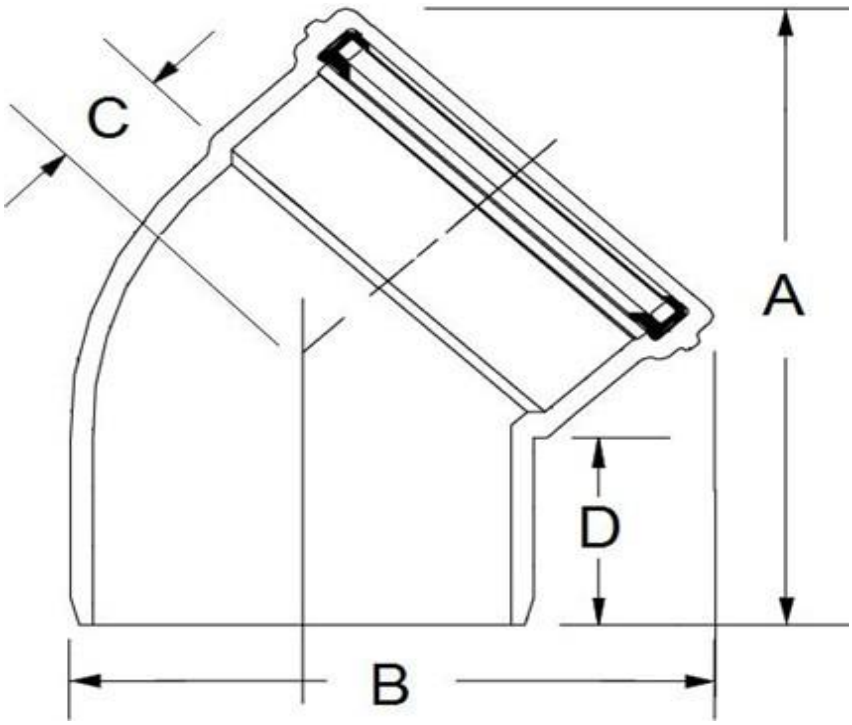

INJECTION MOLDED FITTING

Part #	Size	A	B	C	D
35-1602	4"	7.50	5.88	0.96	2.38
35-1710	5"	9.56	7.06	1.38	2.55
35-1603	6"	12.00	8.38	1.41	3.92
35-95	8"	13.63	11.53	1.10	4.13
35-104	10"	15.00	13.13	2.75	4.31
35-113	12"	18.75	16.88	2.81	4.75

LAYING LENGTHS

1/16 BEND GxG

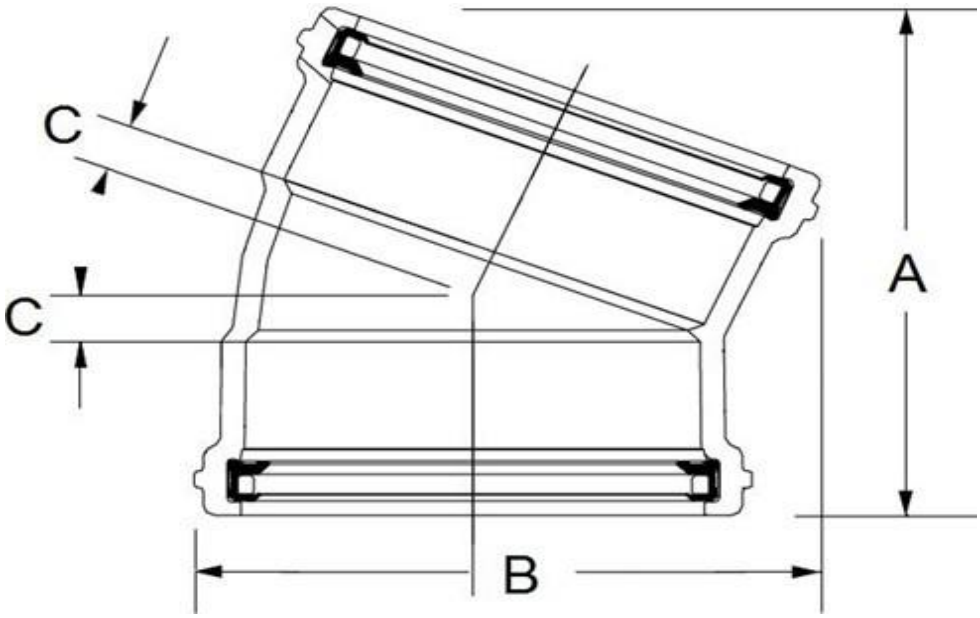

INJECTION MOLDED FITTING

Part #	Size	A	B	C
35-1604	4"	6.06	5.25	0.54
35-1707	5"	4.06	5.68	0.75
35-1605	6"	9.85	8.75	0.90
35-90	8"	9.44	10.75	1.10

LAYING LENGTHS

1/16 BEND GxS

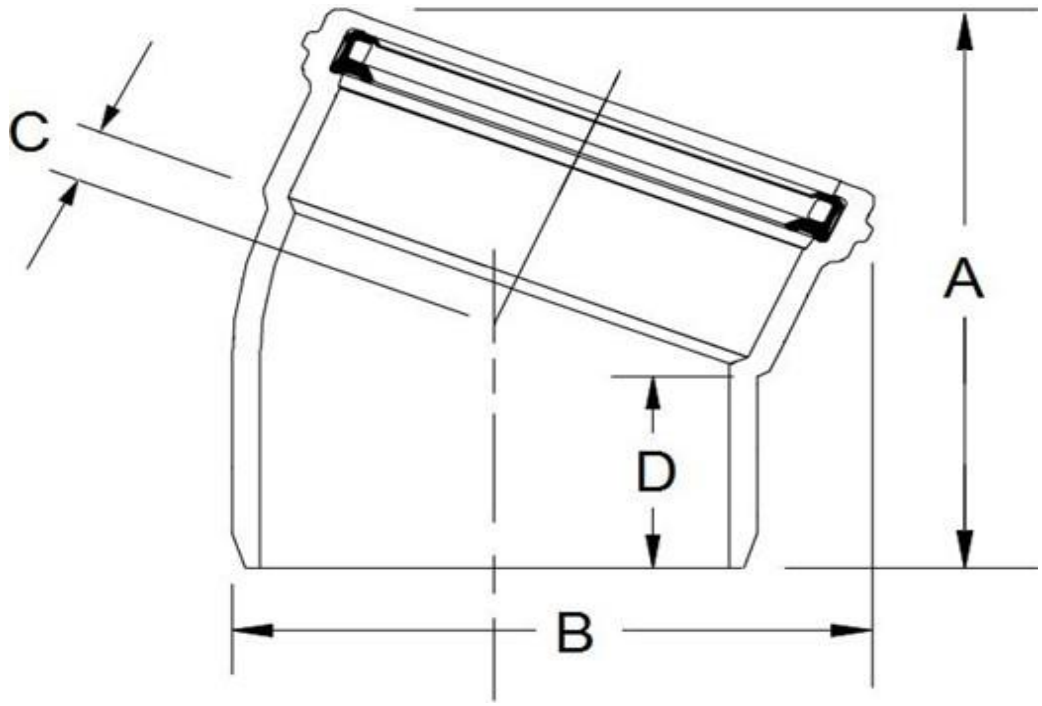

INJECTION MOLDED FITTING

Part #	Size	A	B	C	D
35-1606	4"	6.13	5.00	0.54	2.75
35-1708	5"	9.31	6.50	0.75	2.55
35-1607	6"	8.88	7.88	0.81	3.55
35-91	8"	9.80	10.38	1.10	5.25

LAYING LENGTHS

ADAPTER C-900 BY SEWER GASKET

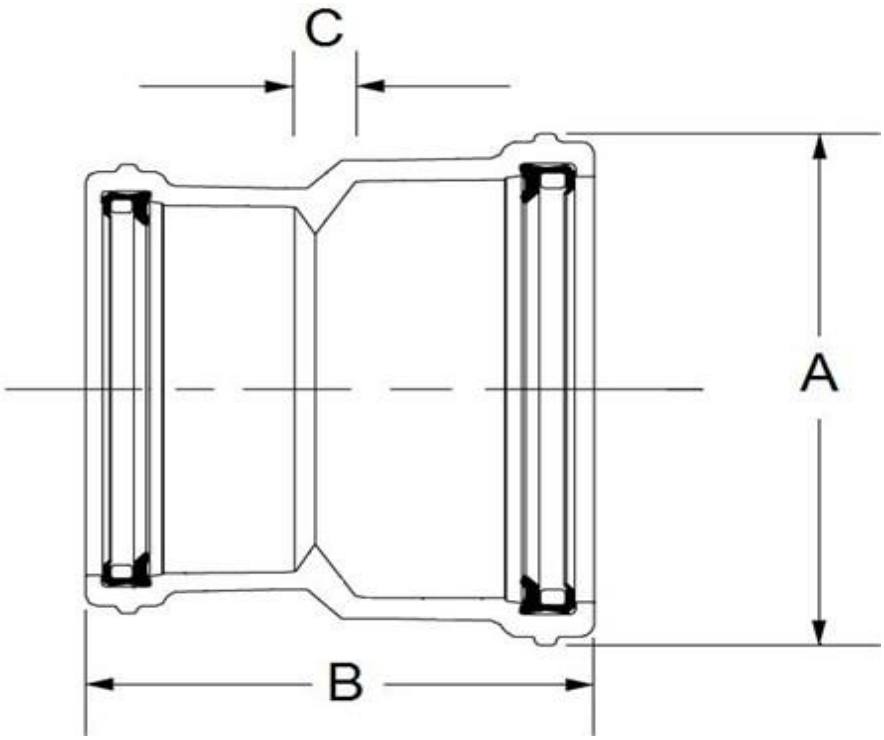

INJECTION MOLDED FITTING

Part #	Size	A	B	C
35-664	4"	5.69	7.25	0.38

LAYING LENGTHS

STOP COUPLING

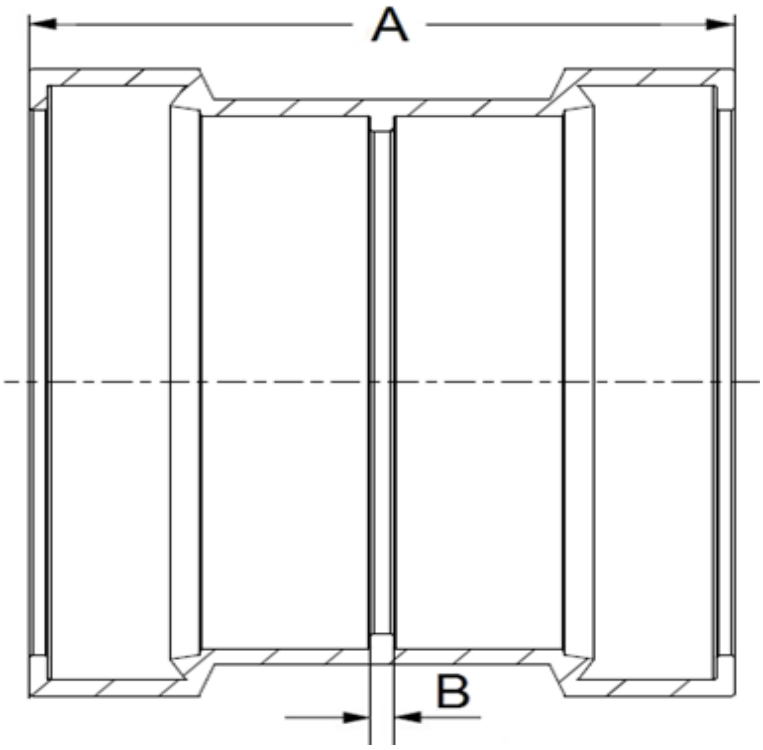

INJECTION MOLDED FITTING

Part #	Size	A	B
35-1546	4"	5.96	5.20
35-1547	6"	8.30	7.52
35-1548	8"	10.00	9.54
35-236	10"	12.01	11.81
35-237	12"	14.42	14.23

LAYING LENGTHS

REPAIR COUPLING

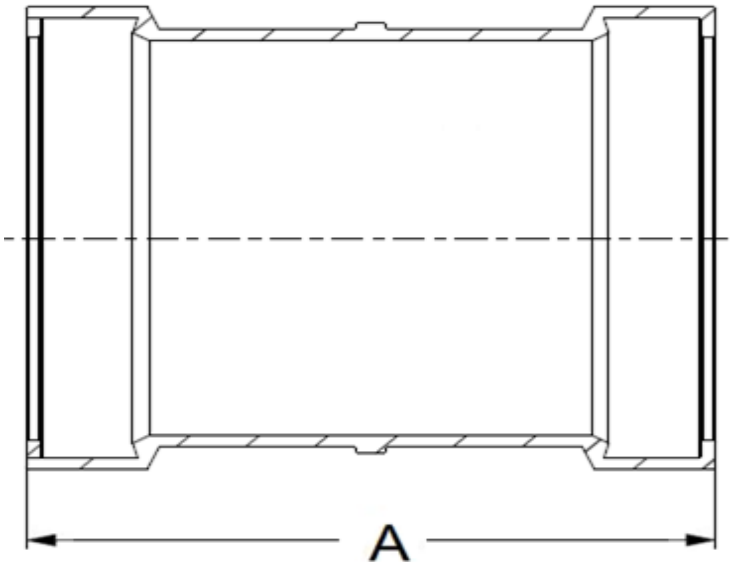

INJECTION MOLDED FITTING

Part #	Size	A
35-1549	4"	5.96
35-1550	6"	8.30
35-1551	8"	10.00
35-230	10"	12.01
35-231	12"	14.42

LAYING LENGTHS

TEE WYE GxGxG

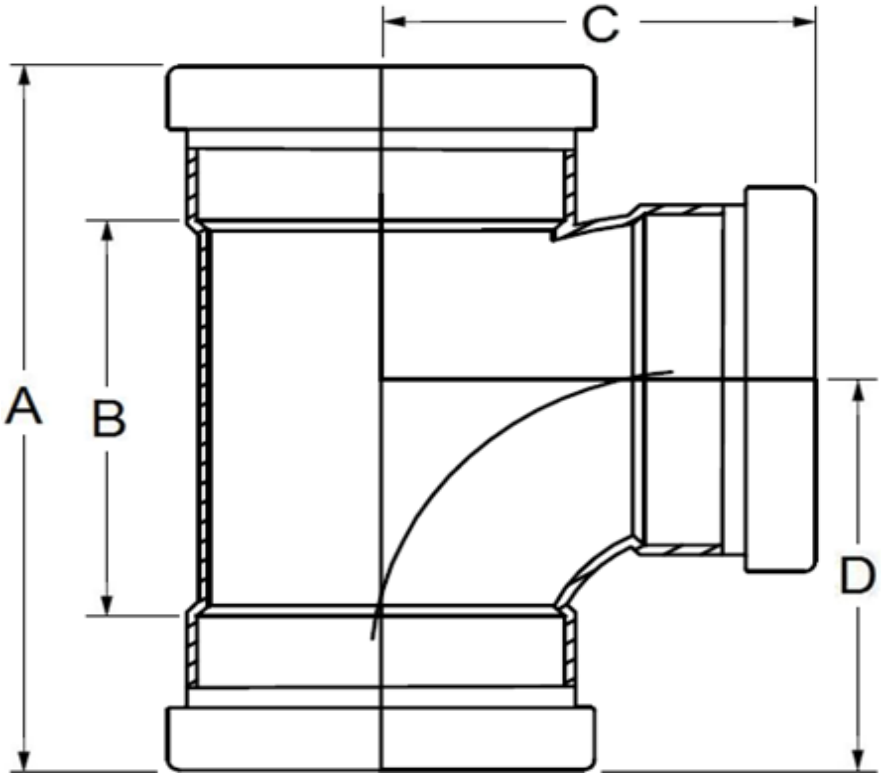

INJECTION MOLDED FITTING

Part #	Size	A	B	C	D
35-1800	4"	9.51	5.27	5.01	5.02
35-1801	6"x4"	10.91	5.21	6.23	5.74
35-1802	6"	13.73	7.97	7.64	7.58
35-1803	8"x4"	12.12	5.62	7.39	6.58
35-1804	8"x6"	14.82	8.18	8.62	8.17
35-1813	10x6"	16.40	8.29	9.70	9.09

LAYING LENGTHS

TEE WYE & 1/8 BEND (2 PIECES)

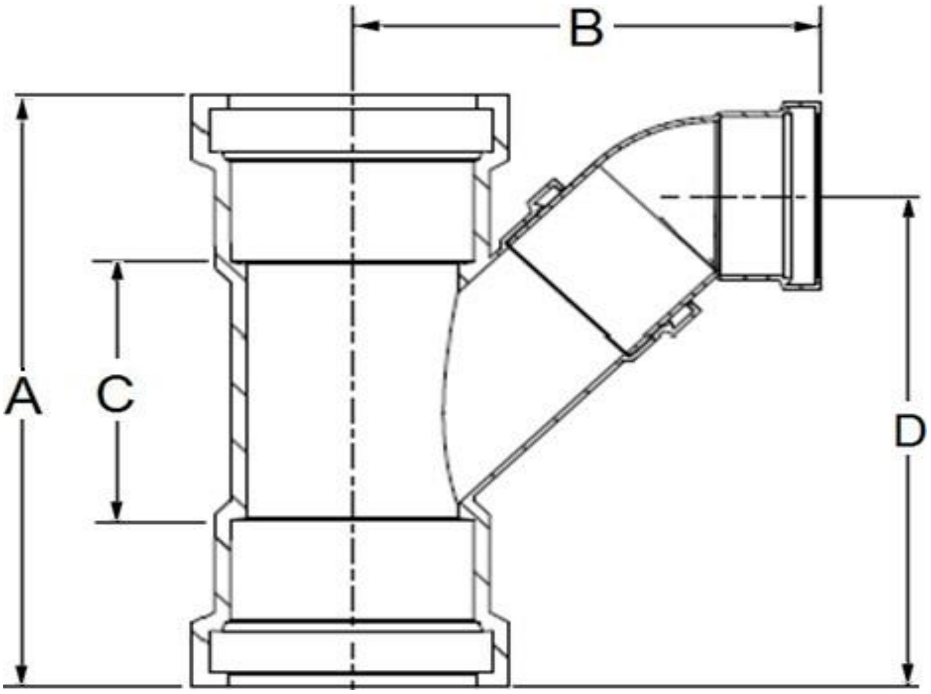

INJECTION MOLDED FITTING

Part #	Size	A	B	C	D
35-1740	8"	19.76	17.05	13.39	17.50
35-326	10" X 4"	14.57	13.52	6.54	11.77
35-330	12" X 4"	19.00	14.64	9.69	13.88
35-331	12" X 6"	19.00	16.83	9.69	15.11

LAYING LENGTHS

TEE WYE GxSxG

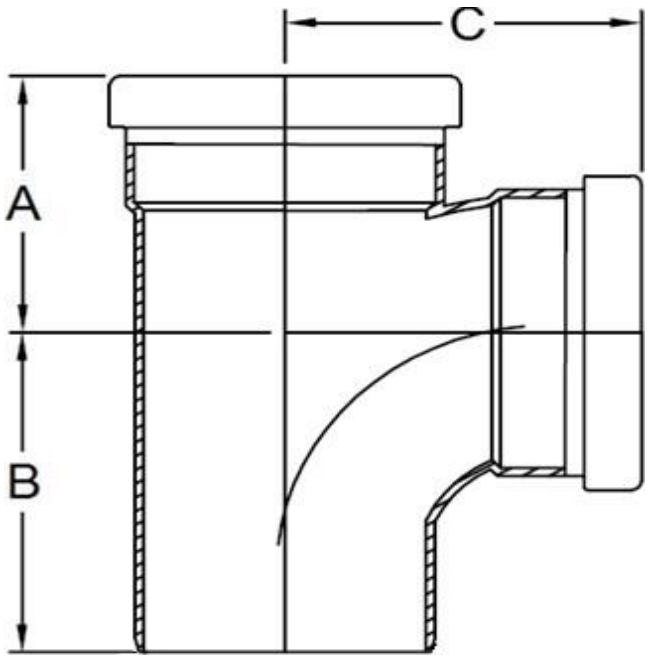

INJECTION MOLDED FITTING

Part #	Size	A	B	C
35-1807	4"	4.14	5.53	5.40
35-1810	8" x 4"	6.04	7.24	8.05
35-1811	8" x 6"	6.89	8.58	9.76

LAYING LENGTHS

TEE WYE & 1/8 BEND (2 PIECES) STREET

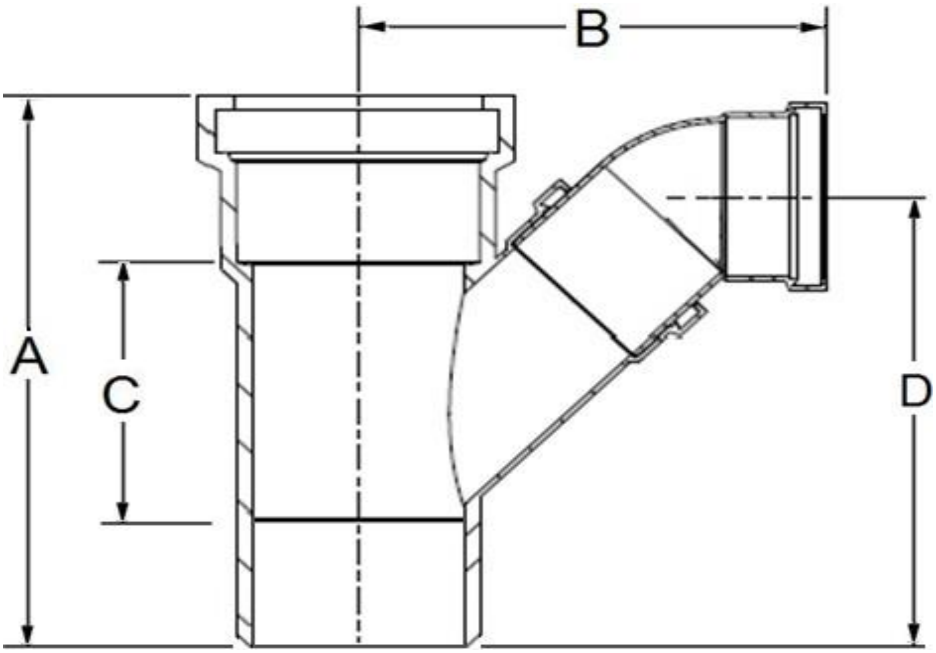

INJECTION MOLDED FITTING

Part #	Size	A	B	C	D
35-1741	6"x4"	11.23	11.27	6.40	11.00
35-1742	6"	13.62	14.54	8.83	14.43

LAYING LENGTHS

SADDLE WYE

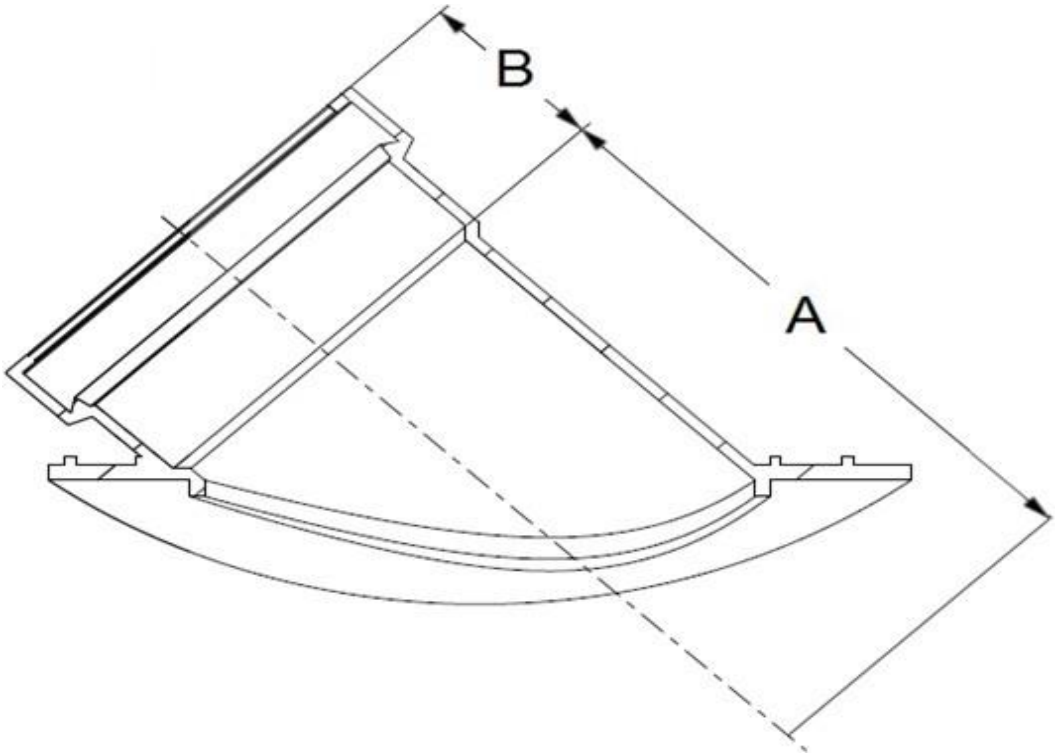

INJECTION MOLDED FITTING

* two(2) stainless steel straps included

Part #	Size	A	B
35-1578	6" x 4"	8.35	2.90
35-285	8" x 4"	9.41	2.90
35-286	8" x 6"	13.62	4.12
35-287	10" x 4"	11.88	2.90
35-288	10" x 6"	16.88	4.12
35-291	12" x 4"	14.86	2.90
35-292	12" x 6"	19.85	4.12
35-296	15" x 6"	22.21	4.12
35-301	18" x 6"	25.26	4.12

LAYING LENGTHS

SADDLE TEE

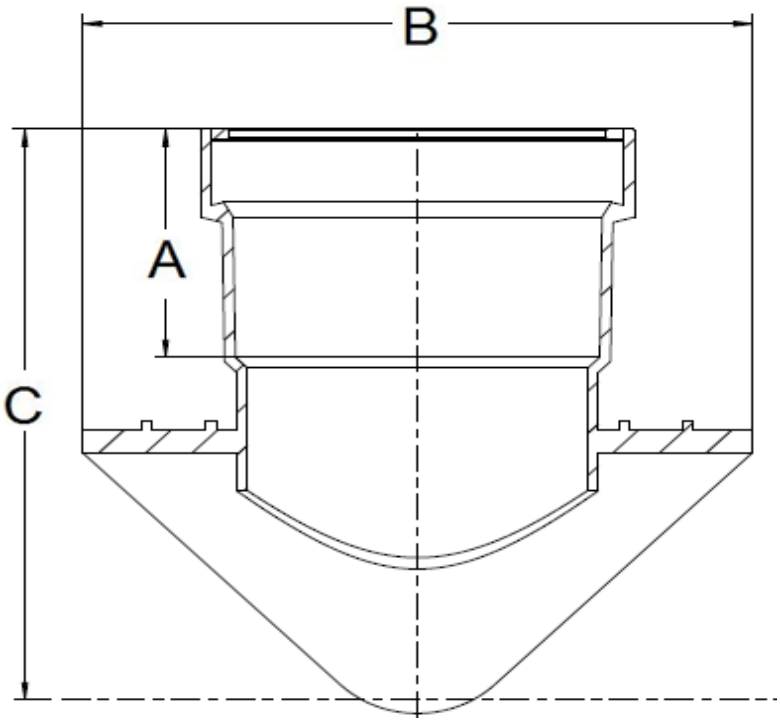

INJECTION MOLDED FITTING

* two(2) stainless steel straps included

Part #	Size	A	B	C
35-1579	6" x 4"	2.90	7.74	7.21
35-245	8" x 4"	2.90	7.74	8.21
35-246	8" x 6"	4.12	9.78	9.52
35-247	10" x 4"	2.90	7.74	9.21
35-248	10" x 6"	4.12	9.78	10.52
35-250	12" x 4"	2.90	7.74	10.21
35-251	12" x 6"	4.12	9.78	11.52
35-254	15" x 4"	2.90	7.74	10.71
35-255	15" x 6"	4.12	9.78	13.02
35-259	18" x 4"	2.90	7.74	13.21

LAYING LENGTHS

SADDLE TEE FOR POLYETHYLENE PIPE

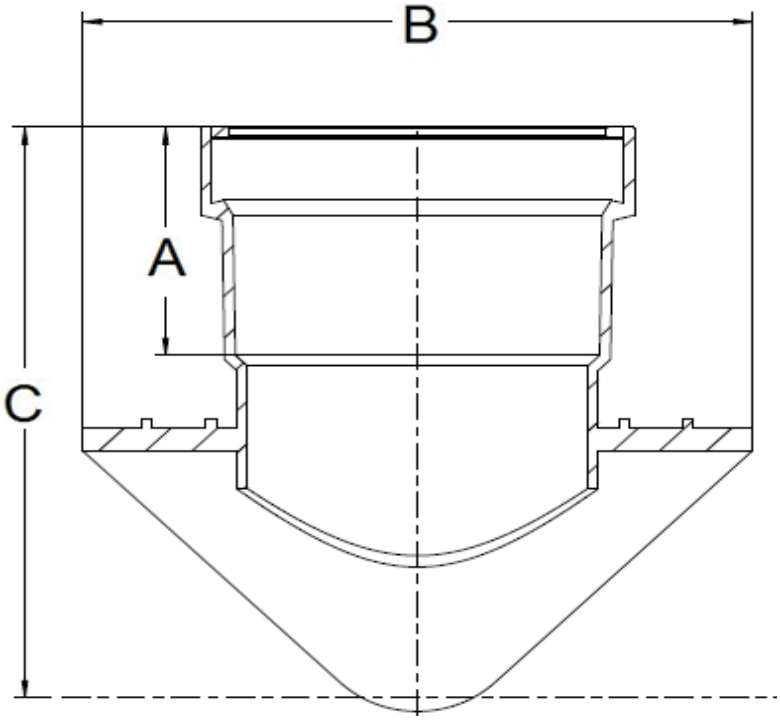

INJECTION MOLDED FITTING

* two(2) stainless steel straps included

Part #	Size	A	B	C
35-1580	8X4	2.90	7.74	8.21
35-1581	8X6	4.12	9.78	9.52
35-1582	10X4	2.90	7.74	9.21
35-1583	10X6	4.12	9.78	10.52
35-1584	12X4	2.90	7.74	10.21
35-1585	12X6	4.12	9.78	11.52

LAYING LENGTHS

MANHOLE SLEEVE G/F

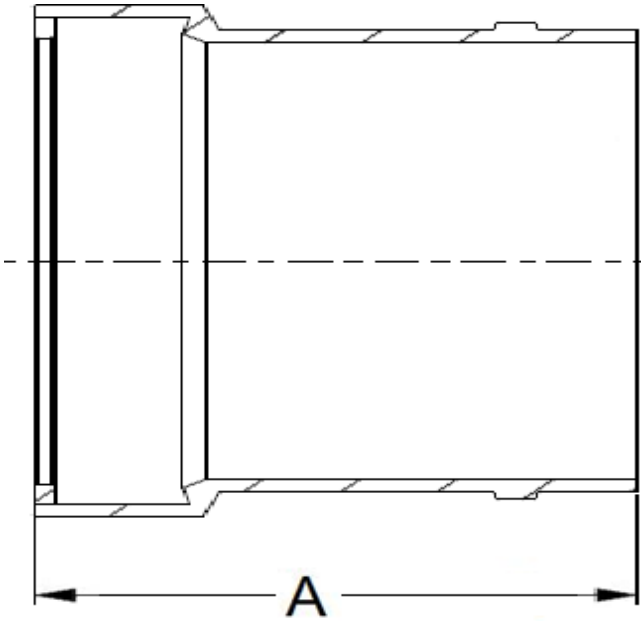

INJECTION MOLDED FITTING

Part #	Size	A
35-1608	4"	4.71
35-1609	6"	5.52
35-217	8"	6.07
35-218	10"	7.34
35-219	12"	8.60

LAYING LENGTHS

TEMPORARY PLUG

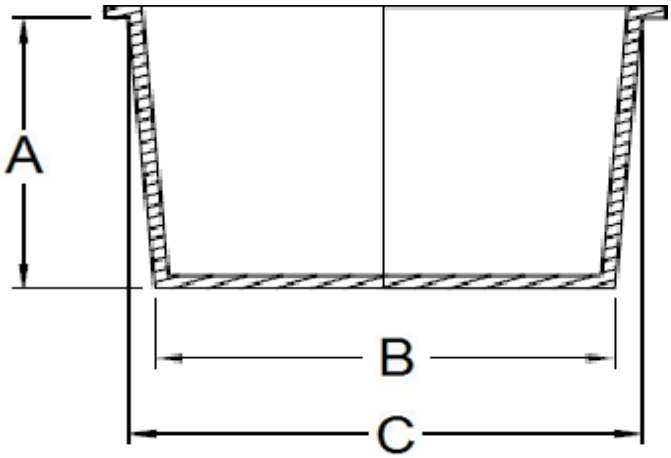

INJECTION MOLDED FITTING

Part #	Size	A	B	C
35-1610	4"	3.73	3.51	4.41
35-1611	6"	3.73	5.58	6.57
35-1612	8"	4.50	7.36	8.50

LAYING LENGTHS

REDUCER BUSHING ECCENTRIC SXG

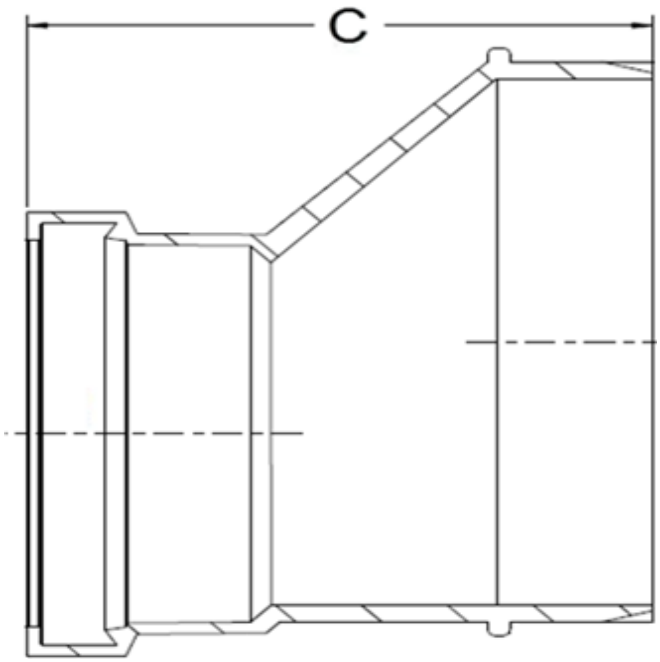

INJECTION MOLDED FITTING

Part #	Size	C
35-1626	6" x 4"	7.51
35-885	8" x 4"	9.13
35-895	8" x 6"	10.13

LAYING LENGTHS

INCREASER COUPLING ECCENTRIC GXG

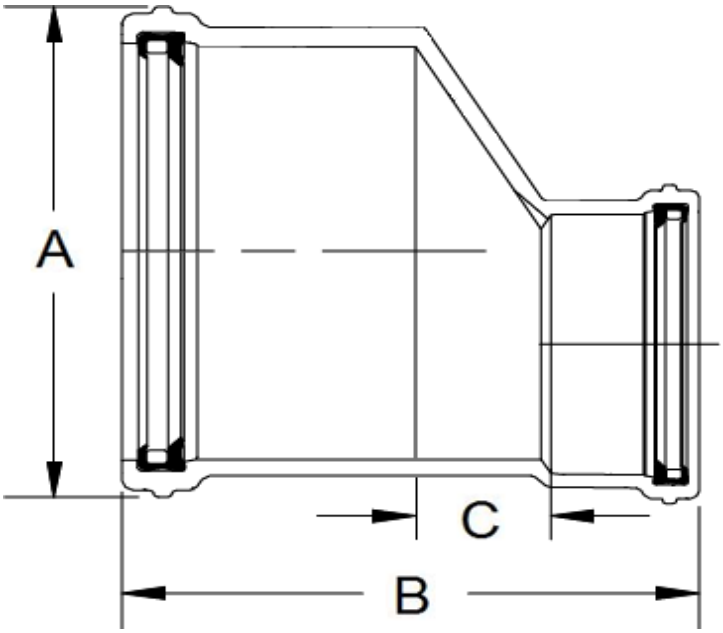

INJECTION MOLDED FITTING

Part #	Size	A	B	C
35-1630	6" x 4"	7.38	7.24	2.02

LAYING LENGTHS

ADAPTER SEWER GASKET BY DWV HUB

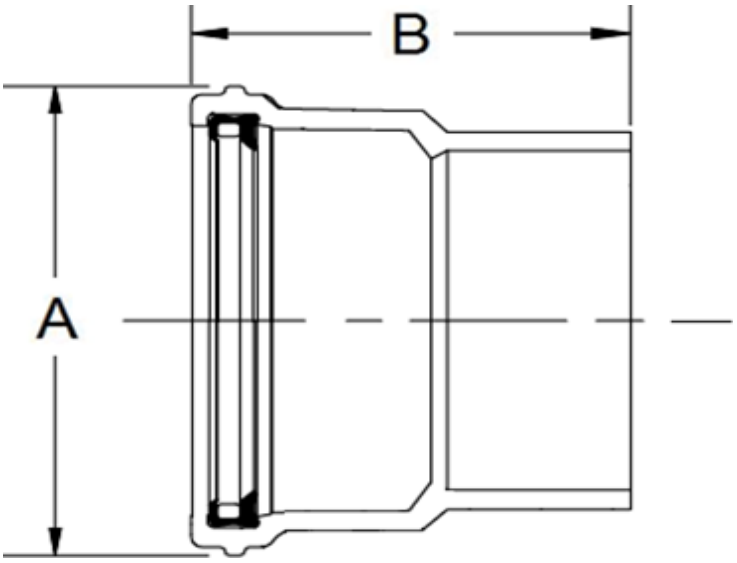

INJECTION MOLDED FITTING

Part #	Size	A	B
35-1678	4" x 3"	5.24	5.24
35-1679	4"	5.24	5.06

LAYING LENGTHS

ADAPTER SEWER GASKET BY SEWER SPIGOT

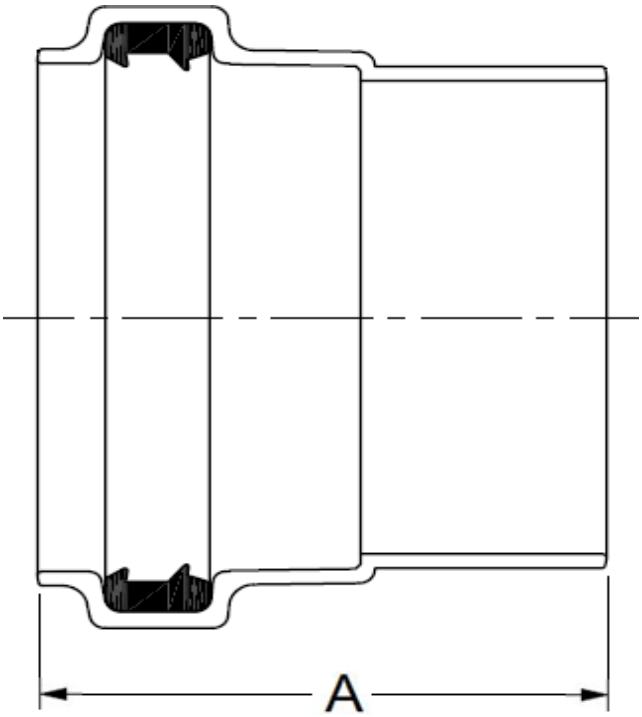

INJECTION MOLDED FITTING

Part #	Size	A
35-1700	4"	5.28
35-1701	6"	8.01
35-1702	8"	10.54

LAYING LENGTHS

ADAPTER SEWER GASKET BY SEWER HUB

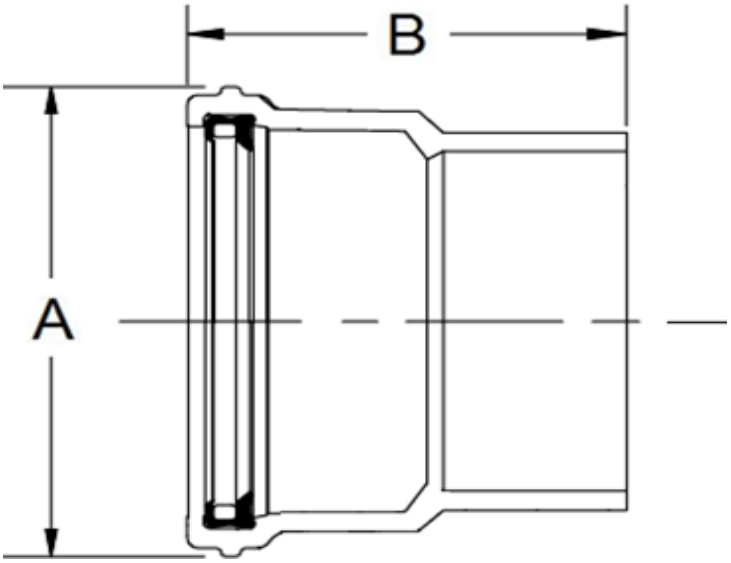

INJECTION MOLDED FITTING

Part #	Size	A	B
35-1648	4"	5.20	4.78
35-1649	6"	7.52	7.25
35-1650	8"	8.78	9.54

LAYING LENGTHS

PERMANENT PLUG

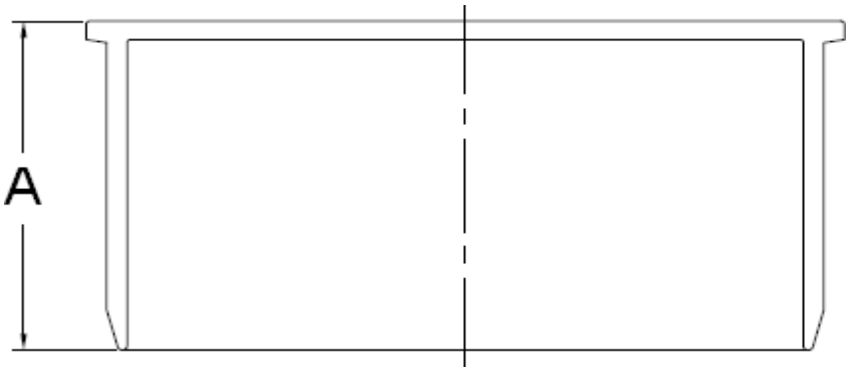

INJECTION MOLDED FITTING

Part #	Size	A
35-1613	4"	2.88
35-1614	6"	4.31
35-1615	8"	6.14
35-224	10"	7.50
35-225	12"	9.20

LAYING LENGTHS

REDUCER BUSHING CONCENTRIC SxG

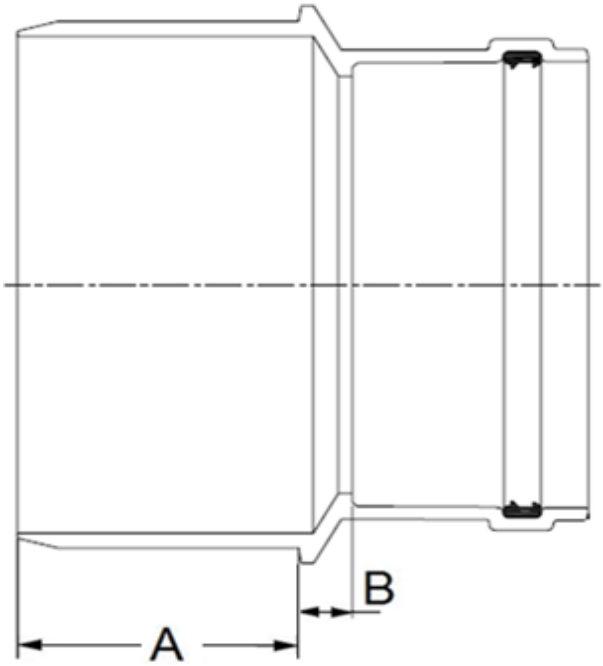

INJECTION MOLDED FITTING

Part #	Size	A	B
35-1627	6 X 4	3.50	1.25
35-181	8 X 4	4.13	2.38
35-182	8 X 6	4.00	1.63
35-183	10 X 4	5.00	2.50

LAYING LENGTHS

ADAPTER SEWER GASKETED X DWV SPIGOT

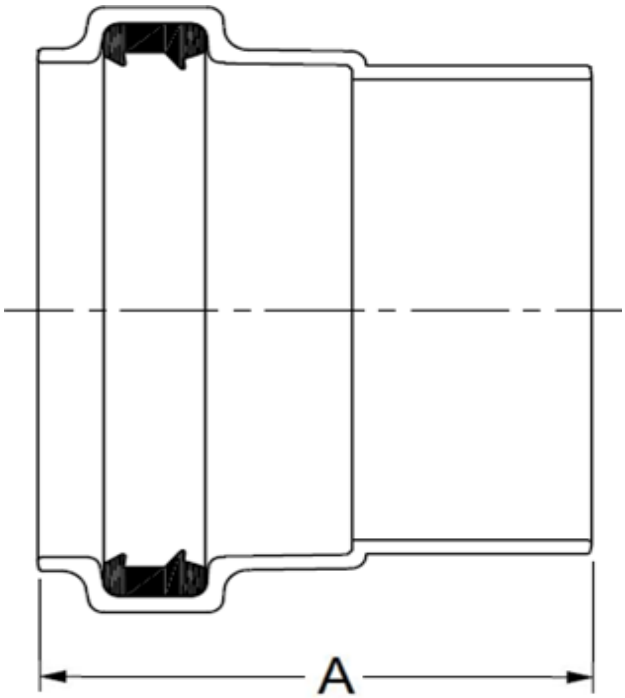

INJECTION MOLDED FITTING

Part #	Size	A
35-1688	4"	3.36
35-1689	6"	4.79

LAYING LENGTHS

TWO WAY CLEAN OUT GxGxG

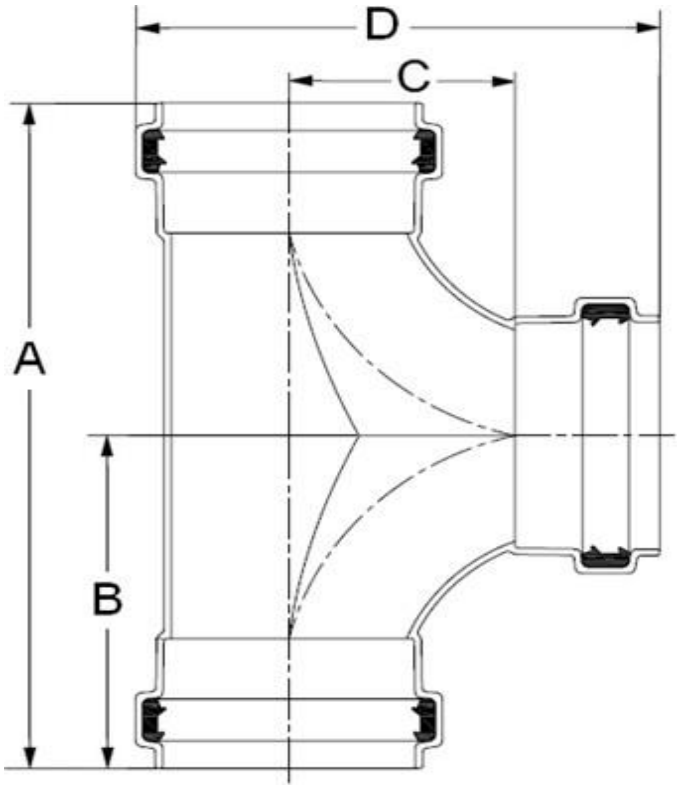

INJECTION MOLDED FITTING

Part #	Size	A	B	C	D
35-1664	4"	12.51	6.26	3.81	8.85
35-1666	6"	18.96	9.48	5.95	13.09

LAYING LENGTHS

TWO WAY CLEAN OUT GxGxG

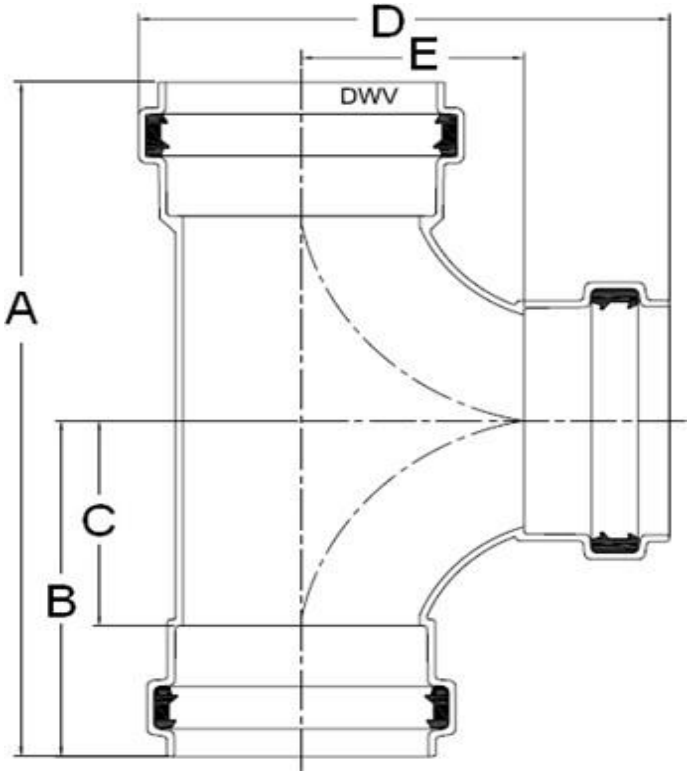

INJECTION MOLDED FITTING

Part #	Size	A	B	C	D	E
35-1665	4"	12.62	6.28	3.84	8.91	3.73

LAYING LENGTHS

ADAPTER SEWER SPIGOT X DWV GASKETED BELL

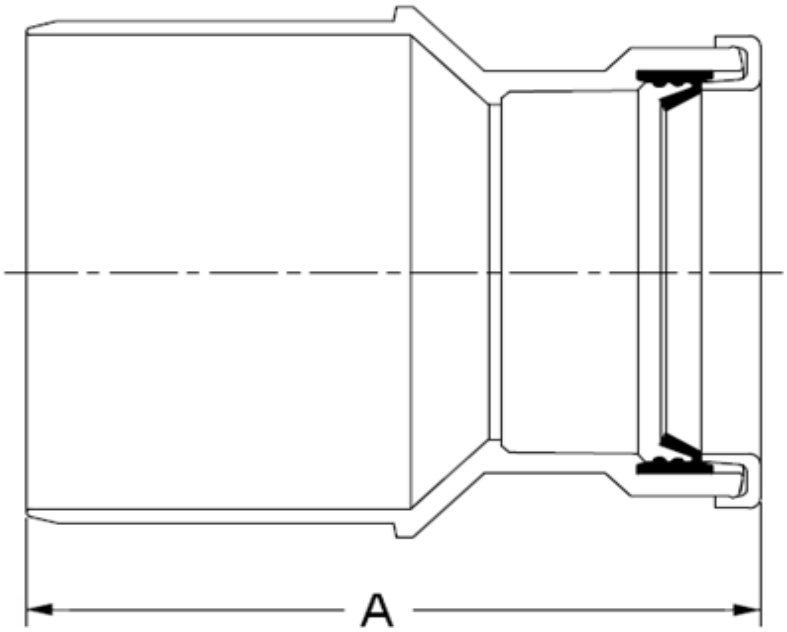

INJECTION MOLDED FITTING

Part #	Size	A
35-1311	4"	5.51
35-1312	6" x 4"	8.25
35-1313	6"	8.71

LAYING LENGTHS

ADAPTER SEWER HUB x DWV GASKET BELL

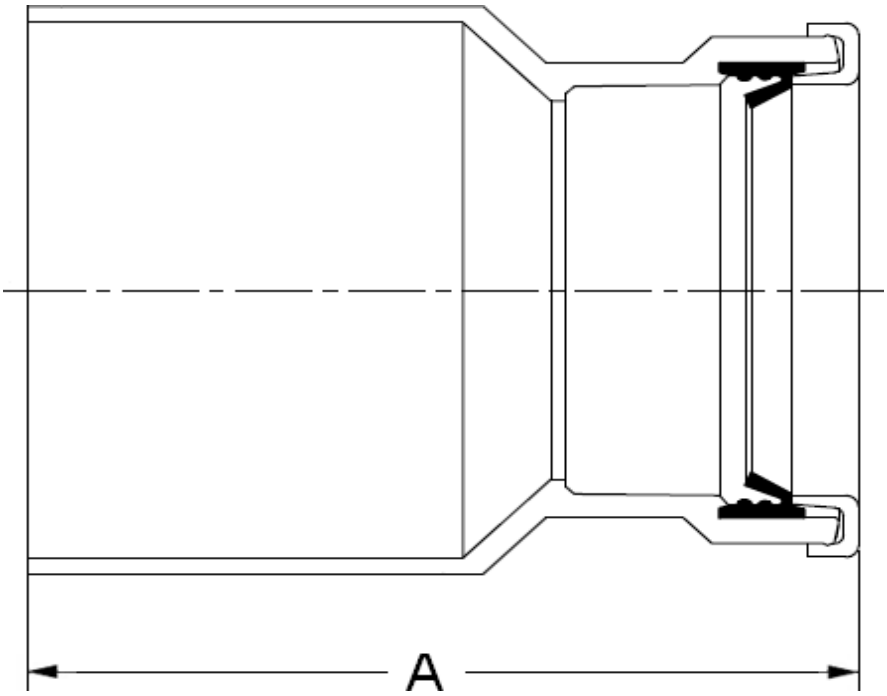

INJECTION MOLDED FITTING

Part #	Size	A
35-1314	4"	5.50
35-1315	6" x 4"	6.94
35-1316	6"	8.60